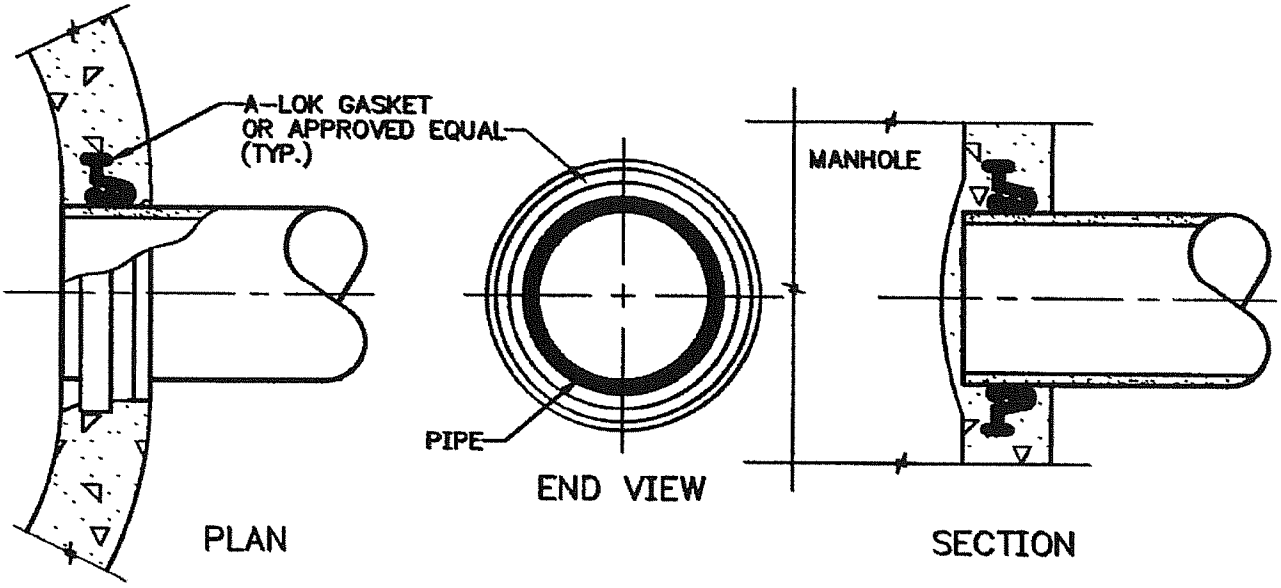

TYPE 1

RUBBER GASKET CAST INTO
PRECAST PIPE OPENINGS

NOTE:
AFTER PIPE-TO- MANHOLE INSTALLATION, SEAL ANNULAR SPACE AROUND PIPE, INSIDE AND OUTSIDE OF MANHOLE WITH POLYURETHANE SEALING COMPOUND OR NON-SHRINK CEMENT GROUT.
(TYP. OF ALL CONNECTIONS).

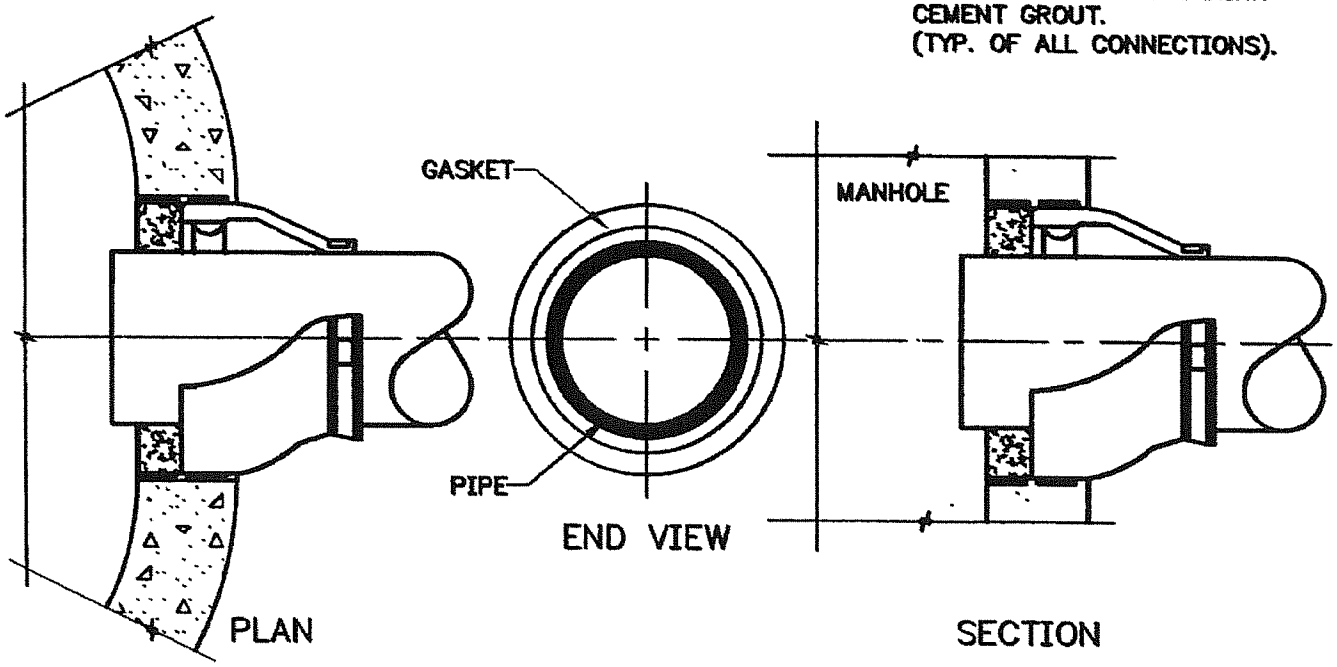

TYPE 2

RUBBER GASKET COMPRESSION RING
INSERT FOR PRECAST PIPE OPENINGS

STANDARD DETAIL

MANHOLE PIPE GASKETS

WASHINGTON TOWNSHIP MUNICIPAL AUTHORITY

DATE	REVISIONS

SCALE	DWG. NO.
NO SCALE	MH-7